Work Order ID 65447

Monday, January 17, 2011 4:07:45 PM

Item ID: D4055-11 **Accept** **Setup Start**

Revision ID:

Item Name: Tank Front and Bottom **Stop**

Start Date: 1/18/2011 **Start Qty:** 3.00 **Cust Item ID:**

Required Date: 2/1/2011 **Req'd Qty:** 3.00 **Customer:**

Reference:

Approvals: **Process Plan:** MF **Date:** 11-01-18 **Tooling:** _____ **Date:** _____ **Run Start**

QC: _____ **Date:** _____ **SPC (Y/N):** _____ **Date:** _____ **Stop**

Sequence ID/ Work Center ID	Operation Description	Set Up/ Run Hours	Tool ID	Tool #	Plan Code	Accept Qty	Reject Qty	Reject Number	Insp. Stamp
Draw Nbr / **Revision Nbr**									
D4055 / A									
100		0.00							
Purchasing	**Memo**	0.00				CL	11/01/18	(3)	
Purchasing	Issue P/O: 13307 Purchase part as per Dwg D4055 Possible Supplier: GFI Material release note required								
110	Receive & Inspect for Damage & Mat'l Certs	0.00							
Packaging	**Memo**	0.00				1/4/16	(3)		
Packaging									
120	QC6- Inspect dimensions to drawing	0.00							
QC	**Memo**	0.00	Su 02/07			(x3)			
Quality Control									

Dart Aerospace Ltd

W/O:		WORK ORDER CHANGES					
DATE	STEP	PROCEDURE CHANGE	By	Date	Qty	Approval Chief Eng / Prod Mgr	Approval QC Inspector

Part No: _____ PAR #: _____ Fault Category: _____ NCR: Yes No DQA: _____ Date: _____

Resolution: _____ Disposition: _____ QA: N/C Closed: _____ Date: _____

NCR:		WORK ORDER NON-CONFORMANCE (NCR)						
DATE	STEP	Description of NC Section A	Corrective Action Section B			Verification Section C	Approval Chief Eng	Approval QC Inspector
			Initial Chief Eng	Action Description Chief Eng	Sign & Date			

NOTE: Date & initial all entries

Work Order ID 65447

Monday, January 17, 2011 4:07:45 PM

Item ID: D4055-11
Revision ID:
Item Name: Tank Front and Bottom
Start Date: 1/18/2011 **Start Qty:** 3.00
Required Date: 2/1/2011 **Req'd Qty:** 3.00
Reference:

Accept

Setup Start
Stop

Cust Item ID:
Customer:

Approvals: **Process Plan:** _____ **Date:** _____ **Tooling:** _____ **Date:** _____
QC: _____ **Date:** _____ **SPC (Y/N):** _____ **Date:** _____

Run Start
Stop

Sequence ID/ Work Center ID	Operation Description	Set Up/ Run Hours	Tool ID	Tool #	Plan Code	Accept Qty	Reject Qty	Reject Number	Insp. Stamp
130 HandFinish Hand Finishing	Chemical Conversion Coat per QSI005 4.1	0.00	11·03·05			3	ø		
	Memo	0.00							
140 QC Quality Control	QC3- Inspect Part Finish	0.00	SB 11/03/07			3			
	Memo	0.00							
150 Packaging Packaging	Identify as per dwg & Stock Location: WA	0.00	11·03·07			3	ø		
	Memo	0.00							

Dart Aerospace Ltd

W/O:		WORK ORDER CHANGES					
DATE	STEP	PROCEDURE CHANGE	By	Date	Qty	Approval Chief Eng / Prod Mgr	Approval QC Inspector

Part No: _____ PAR #: _____ Fault Category: _____ NCR: Yes No DQA: _____ Date: _____

Resolution: _____ Disposition: _____ QA: N/C Closed: _____ Date: _____

NCR:		WORK ORDER NON-CONFORMANCE (NCR)						
DATE	STEP	Description of NC Section A	Corrective Action Section B			Verification Section C	Approval Chief Eng	Approval QC Inspector
			Initial Chief Eng	Action Description Chief Eng	Sign & Date			

NOTE: Date & initial all entries

Work Order ID 65447

Monday, January 17, 2011 4:07:45 PM

Item ID: D4055-11 **Accept** **Setup Start**

Revision ID:

Item Name: Tank Front and Bottom **Stop**

Start Date: 1/18/2011 **Start Qty:** 3.00 **Cust Item ID:**

Required Date: 2/1/2011 **Req'd Qty:** 3.00 **Customer:**

Reference:

Approvals: **Process Plan:** _____ **Date:** _____ **Tooling:** _____ **Date:** _____ **Run Start**

QC: _____ **Date:** _____ **SPC (Y/N):** _____ **Date:** _____ **Stop**

Sequence ID/ Work Center ID	Operation Description	Set Up/ Run Hours	Tool ID	Tool #	Plan Code	Accept Qty	Reject Qty	Reject Number	Insp. Stamp
160	QC21- Final Inspection - Work Order Release	0.00							
QC	Memo	0.00					11/3/7		
Quality Control									

MC

11-03-07

Dart Aerospace Ltd

W/O:		WORK ORDER CHANGES					
DATE	STEP	PROCEDURE CHANGE	By	Date	Qty	Approval Chief Eng / Prod Mgr	Approval QC Inspector

Part No: _____ PAR #: _____ Fault Category: _____ NCR: Yes No DQA: _____ Date: _____

Resolution: _____ Disposition: _____ QA: N/C Closed: _____ Date: _____

NCR:		WORK ORDER NON-CONFORMANCE (NCR)						
DATE	STEP	Description of NC Section A	Corrective Action Section B			Verification Section C	Approval Chief Eng	Approval QC Inspector
			Initial Chief Eng	Action Description Chief Eng	Sign & Date			

NOTE: Date & initial all entries

Picklist Print

Monday, January 17, 2011 4:07:42 PM

Work Order ID: 65447

Parent Item: D4055-11

Parent Item Name: Tank Front and Bottom

Start Date: 1/18/2011 **Required Date:** 2/1/2011

Start Qty: 3.00 **Required Qty:** 3.00

Comments: IPP RevA: new issue DD 10.01.08 verified by:JLM

Component Item ID/ Item Name	Replacement Item ID	Mfg/ Purch	Bin Item	Primary Location	Last Location	Route Seq ID	Unit of Measure	Qty on Hand	Qty per Kit	Total Qty	Qty Issued	Date Issued	Status
D4055-11P Tank Front and Bottom		Purchased	No			110	Each	0.0000	1	3	3	1/24/2/16	

Dart Aerospace Ltd

W/O:		WORK ORDER CHANGES					
DATE	STEP	PROCEDURE CHANGE	By	Date	Qty	Approval Chief Eng / Prod Mgr	Approval QC Inspector

Part No: _____ PAR #: _____ Fault Category: _____ NCR: Yes No DQA: _____ Date: _____

Resolution: _____ Disposition: _____ QA: N/C Closed: _____ Date: _____

NCR:		WORK ORDER NON-CONFORMANCE (NCR)						
DATE	STEP	Description of NC Section A	Corrective Action Section B			Verification Section C	Approval Chief Eng	Approval QC Inspector
			Initial Chief Eng	Action Description Chief Eng	Sign & Date			

NOTE: Date & initial all entries

H:\FORMS\Quality Assurance\approved QA\NCRWO RevE

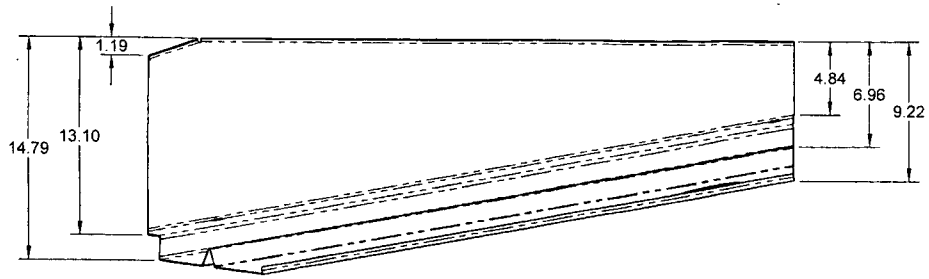

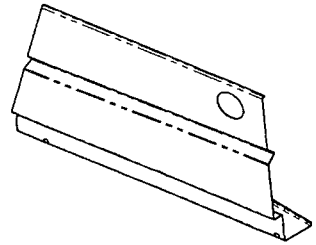

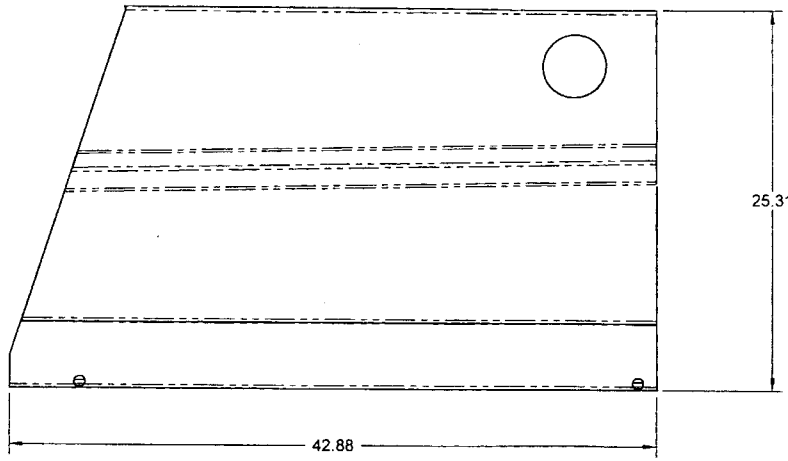

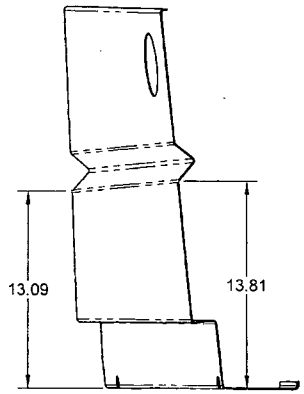

#65447

RELEASED
2010 -05- 05

D4055-11 TANK FRONT AND BOTTOM

NOTES:
1) MATERIAL: MADE FROM D4055-11F
2) FINISH: N/A
3) TOLERANCES: PER DART QSI 018 UNLESS OTHERWISE NOTED
4) UNITS: INCHES UNLESS OTHERWISE NOTED
5) BREAK SHARP EDGES: 0.005 TO 0.010 MAX
6) IDENTIFICATION: N/A
7) WEIGHT: 9.29 lbs

DESIGN		DART AEROSPACE LTD HAWKESBURY, ONTARIO, CANADA
DRAWN		
CHECKED		DRAWING NO. D4055 — REV. A — SHEET 14 OF 15
MFG. APPR.		
APPROVED		TITLE: TANK — SCALE: NTS
DE APPR.		
DATE	10.04.16	

COPYRIGHT © 2010 BY DART AEROSPACE LTD
THIS DOCUMENT IS PRIVATE AND CONFIDENTIAL AND IS SUPPLIED ON THE EXPRESS CONDITION THAT IT IS NOT TO BE USED FOR ANY PURPOSE OR COPIED OR COMMUNICATED TO ANY OTHER PERSON WITHOUT WRITTEN PERMISSION FROM DART AEROSPACE LTD.

Dart Aerospace Ltd

W/O:		WORK ORDER CHANGES					
DATE	STEP	PROCEDURE CHANGE	By	Date	Qty	Approval Chief Eng / Prod Mgr	Approval QC Inspector

Part No: _____ **PAR #:** _____ **Fault Category:** _____ **NCR:** Yes No **DQA:** _____ **Date:** _____

Resolution: _____ **Disposition:** _____ **QA: N/C Closed:** _____ **Date:** _____

NCR:		WORK ORDER NON-CONFORMANCE (NCR)						
DATE	STEP	Description of NC Section A	Corrective Action Section B			Verification Section C	Approval Chief Eng	Approval QC Inspector
			Initial Chief Eng	Action Description Chief Eng	Sign & Date			

NOTE: Date & initial all entries

H:\fFORMS\Quality Assurance\approved QA\NCRWO RevE

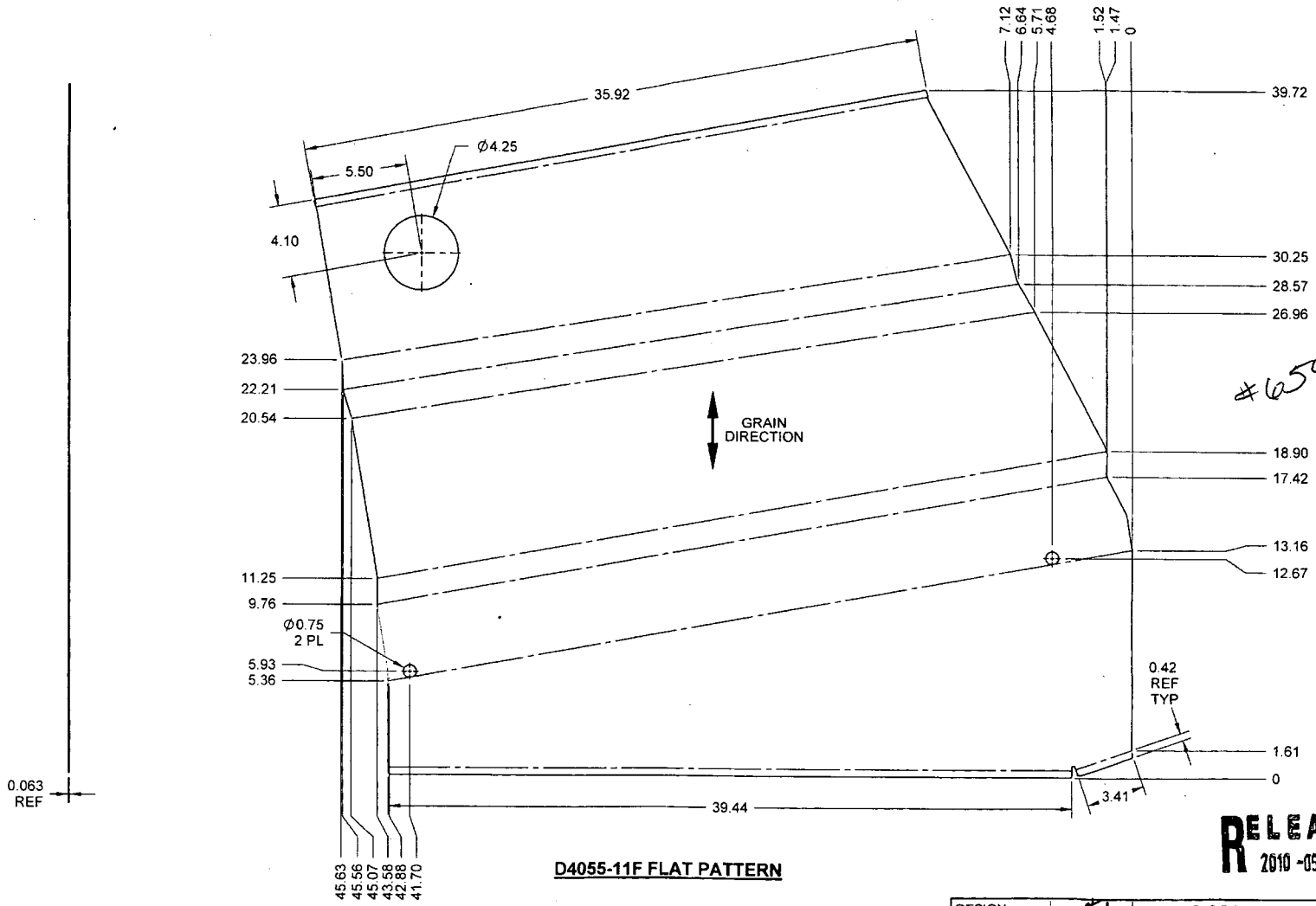

#65447

D4055-11F FLAT PATTERN

RELEASED
2010 -05- 05

NOTES:
1) MATERIAL: 6061-T6 (OR 6061-T62) ALUMINUM SHEET, 0.063 THICK
PER AMS-QQ-A-250/11 OR AMS 4025 OR AMS 4027
REF DART SPEC M6061T6S.063
2) FINISH: N/A
3) TOLERANCES: PER DART QSI 018 UNLESS OTHERWISE NOTED
4) UNITS: INCHES UNLESS OTHERWISE NOTED
5) BREAK SHARP EDGES: 0.005 TO 0.010 MAX
6) IDENTIFICATION: N/A
7) WEIGHT: 9.29 lbs

DESIGN	
DRAWN	
CHECKED	
MFG. APPR.	
APPROVED	
DE APPR.	
DATE	10.04.16

DART AEROSPACE LTD
HAWKESBURY, ONTARIO, CANADA

DRAWING NO. D4055 — REV. A — SHEET 15 OF 15
TITLE: TANK — SCALE: NTS

COPYRIGHT © 2010 BY DART AEROSPACE LTD
THIS DOCUMENT IS PRIVATE AND CONFIDENTIAL AND IS SUPPLIED ON THE EXPRESS CONDITION THAT IT IS NOT TO BE USED FOR ANY PURPOSE OR COPIED OR COMMUNICATED TO ANY OTHER PERSON WITHOUT WRITTEN PERMISSION FROM DART AEROSPACE LTD.

Dart Aerospace Ltd

W/O:		WORK ORDER CHANGES					
DATE	STEP	PROCEDURE CHANGE	By	Date	Qty	Approval Chief Eng / Prod Mgr	Approval QC Inspector

Part No: _____ **PAR #:** _____ **Fault Category:** _____ **NCR:** Yes No **DQA:** _____ **Date:** _____

Resolution: _____ **Disposition:** _____ **QA: N/C Closed:** _____ **Date:** _____

NCR:		WORK ORDER NON-CONFORMANCE (NCR)						
DATE	STEP	Description of NC Section A	Corrective Action Section B			Verification Section C	Approval Chief Eng	Approval QC Inspector
			Initial Chief Eng	Action Description Chief Eng	Sign & Date			

NOTE: Date & initial all entries

H:\fFORMS\Quality Assurance\approved QA\NCRWO RevE

CERTIFICATE OF COMPLIANCE
CERTIFICAT DE CONFORMITE

GFI
Membre de / A Member of Thomas&Betts

180 LABROSSE AVENUE
POINTE CLAIRE, QC
H9R 1A1

DART AEROSPACE LTD
1270 ABERDEEN ST.
HAWKESBURY, ON K6A 1K7

CERTIFICATE NO. **3** OUR JOB NO **J0226101** SHIPPING MEMO **0455818**

ITEM	QUANTITY	PURCHASE ORDER	PART NUMBER	REV	NAME	DWG ISSUE
–	3 PCS	PO13307	D4055-11P	A	TANK FRONT	A

MATERIAL	SUPPLIED BY	MAT. REL. NO.
.063 THK AL 6061-T6 (AMS-QQ-A250/11)	SAMUEL / ALCOA INC	371069

	PROCESS	PROCESSOR	RELEASE NOTE #
1	FIRST ARTICLE INSPECTION REPORT ON FILE	GFI	N/A
2	REF. GFI MANUFACTURING JOB NUMBER J0226101-001 (3 PCS)		
3			
4			
5			
6			
7			
8			
9			

WE HEREBY CERTIFY ALL THE PARTS COVERED BY THIS CERTIFICATE HAVE BEEN MANUFACTURED FROM MATERIAL SUPPLIED ON RELEASE NOTE SHOWN ABOVE AND THAT ALL PARTS HAVE BEEN INDIVIDUALLY INSPECTED AND CONFORM TO THE DRAWINGS AND PURCHASE ORDER REFERENCED ABOVE.

G.F.I. Q.C. REP.

DATE **15 FEBRUARY 2011**

GFI CONTROLE QUALITY ISO 9001:2008

180 AVENUE LABROSSE
POINTE-CLAIRE, QC, CANADA H9R 1A1
TÉL.:(514) 630-4877 - FAX:(514) 630-4849

ISO 9001:2000 CERTIFICATION Intertek

BON DE LIVRAISON / *SHIPPING MEMO*

DATE DE LIVRAISON/*SHIPPING DATE* JR - DY	MO - MO	AN - YR	N° DE BON DE LIVRAISON/ *SHIPPING MEMO NO*	PAGE
14	02	11	0455818	1/1

GFI est une division de Thomas & Betts Fabrication Inc. / GFI is a division of Thomas & Betts Manufacturing Inc.

VENDU À / *SOLD TO*

DART AEROSPACE LTD
1270 ABERDEEN ST.
HAWKESBURY, ON
K6A 1K7

EXPÉDIÉ À / *SHIP TO*

DART AEROSPACE LTD
1270 ABERDEEN ST.
HAWKESBURY, ON
K6A 1K7

CODE DE CLIENT *CUSTOMER CODE*		N° DE CONTRAT *JOB NO*	VOTRE N° DE COMMANDE *YOUR PURCHASE ORDER NO*	EXPÉDIÉ PAR *SHIP VIA*
DART	GFI-0299	0226101	PO13307	

QUANTITÉ *QUANTITY*	N° DE PIÈCE *PART NO*	DESCRIPTION
3	D4055-11P	TANK FRONT AND BOTTOM CERTIFICATE OF CONFORMANCE REQ

MFG. JOB# J0226101-001 QTY 3

GFI 8 CONTROLE QUALITE ISO 9001:2008

EXPÉDITEUR *SHIPPER*	N° DE BON DE LIVRAISON *SHIPPING MEMO NO*

REÇU PAR / *RECEIVED BY* DATE

TOUTES LES RÉCLAMATIONS DOIVENT ÊTRE FAITES EN DEDANS DE 5 JOURS DE LA RÉCEPTION
ALL CLAIMS MUST BE MADE WITHIN 5 DAYS OF RECEIPT OF GOODS.

LES MÉTAUX SPÉCIALISÉS SAMUEL

Programme d'Assurance Qualité Enregistré / Registered Q.A. Program
ISO 9001:2008 + AS9100B

LETTRE DE CONFORMITÉ - LETTER OF COMPLIANCE

Date: JANUARY 26,2011

Company Name: GFI Division of Thomas & Betts limited
Address: 180 avenue Labrosse
City: Pointe-Claire Qc
Zip Code: H9R 1A1

 # du client: 0077902
Customer's order #:

 # de commande SSMQ: 041461
SSMQ's Order #:

La présente est pour certifier que le matériel détaillé ci-dessous est conforme aux exigences de votre commande et des normes du grade tel que décrit:

The following is to certify that the material listed below meets your order requirements and grade standards as described:

Notre/Our Item #	# de pièces/ # of pieces	Épaisseur/Grandeur Guage/Size	Alliage/Trempe Alloy/Temper	Spécification / Specification	Lot/Heat
01	1	.063" X 48" X 144"	6061 T6	AMS-QQ-A-250/11	371069

Bien à vous,
Yours truly,

INSPECTION 12 SAMUEL

CERTIFIED INSPECTION REPORT

Alcoa Inc.

PITTSBURGH, PA DAVENPORT WORKS

Ship From: RIVERDALE, IA.

We hereby certify that the material covered by this certificate has been inspected with, and has been found to meet, the applicable requirements described therein, including any specifications forming a part of the description and that samples representative of the material met the composition limits and had the mechanical properties shown on the face of this sheet.
Per:

Malcolm Murphy
Director of Manufacturing Davenport Works

Kenton P. Young
Quality Assurance Manager

1178931 0

Ship Date	B.L. No.	Invoice No.	Alcoa No. Item	Page 1
2010-11-03	5314203	00000	1000232544-1	DCE-32544-1

P.O. No./Govt Contract No.	Customer	Alcoa Item
C62821 Ln#: 1	SAMUEL SON & CO LT	G041110647R05

Ship To: SAMUEL SON & CO LTD
S.S.M.Q
21525 CLARKE-GRAHAM
BAIE D'URFE H9X 3T5 QC

Item Description
0.063 IN TK (+0.0000 -.0035) X 48.0 IN W (+.125 -.125) X 144.0 IN LN (+.15625 -.15625) (N) A/T 6061-T6 FLAT SHEET FOR DISTRIBUTORS TOLERANCE GUARANTEED. AMS4027 REV N EXC_MRK ASME-SB-209 REV 07 EXC_MRK ASTMB209 REV 07 CMMP025 REV S ((MARKED)) KRAFT PAPER INTERLEAVED MAX GROSS SKID WGT: 4500 LB QUAN TOL +/-30 %
CQR 0222751 REV 04 CUST REQ 10-11-01 *** W/E 10-11-06 ***

Suloq17

Num	Package Ticket	Loc	Weight	Quantity	UOM	Inspector Clock Numbers
1	239149	371069	396	10	PC	27088 47004
2	239150	371069	4067	100	PC	27088 47004
3	239152	371069	4063	100	PC	27088 47004
			8526	210		

Notes for CQR: 0222751.4
PRODUCT PRODUCED TO THE REQUIREMENTS OF AMS4027 REV N ALSO MEET THE REQUIREMENTS OF AMS-QQ-A-250_11 ORIGINAL REVISIO N DATED 1997-08-01.

CQR: 0222751.4 -Specification Limits

Tmpr	Dir		UTS KSI	TYS KSI	EL4D PCT
T6	Long Transv.	Max			
		Min	42.0	35.0	10

Chemical Composition

Alloy 6061		SI	FE	CU	MN	MG	CR	ZN	TI	Other Each	Other Total	Aluminum
	Max	0.8	0.7	0.40	0.15	1.2	0.35	0.25	0.15	0.05	0.15	
	Min	0.40		0.15		0.8	0.04					REMAIN

CERTIFIED INSPECTION REPORT

Alcoa Inc.

PITTSBURGH, PA DAVENPORT WORKS

Ship From: RIVERDALE, IA.

We hereby certify that the material covered by this certificate has been inspected with, and has been found to meet, the applicable requirements described therein, including any specifications forming a part of the description and that samples representative of the material met the composition limits and had the mechanical properties shown on the face of this sheet.
Per.

Malcolm Murphy
Director of Manufacturing Davenport Works

Kenton P. Young
Quality Assurance Manager

Ship Date	B.L. No.	Invoice No.	Alcoa No. Item	Page 2
2010-11-03	1178931 0 5314203	00000	1000232544-1	DCE-32544-1

P.O. No./Govt Contract No.	Customer	Alcoa Item
C62821 Ln#: 1	SAMUEL SON & CO LT	G041110647R05

CQR: 0222751.4 -Specification Limits (cont.) ----------
Lot: 371069 - Mechanical, Physical, Metallography, Quantometer Results ----------

Tmpr	Dir	No-> Test	UTS KSI	TYS KSI	EL4D PCT
T6	Long Transv.	2	51.1	45.7	10.4
			50.8	45.3	10.3

Cast Number	Chemical - OES	SI	FE	CU	MN	MG	CR	ZN	TI
H9795095	Actuals	0.66	0.4	0.28	0.03	1.0	0.20	0.03	0.02

This material was melted in the United States or a Qualifying Country [REF DFARS 225.872.1(a)]; it was manufactured in the United States